BEA Architectural Specification Sheet
Automatic and Industrial Door Solutions: Push Plate – 10PBR45x (Hardwired)

Sensor Specifications

Round Push Plate for sliding, swinging, folding and revolving doors as well as industrial doors including overhead, roll-up and high speed. Wired push plate shall utilize a single pole dry contact switch capable of providing a normally open or normally closed contact for door activation.

1. Push plate provided with no exposed fasteners on the faceplate area.
2. Faceplate utilizes an abrasive etch lettering and/or logo. Push plates made of plastic, or having surface applied painted or decaled lettering shall not be acceptable.
3. Stainless steel 4.5 inches (11.43 cm) round style push plate (PBR45) for wall mount applications.
4. Screws come in multiple sizes (#6 & #8) to fit both single and double gang mounting boxes.
5. Beveled edges provide a tamper and vandal resistant solution.
6. ‘All-activate’ plate activates with any "push" location.
7. Weather boot provided between plate and plate back.

Note To Specifier: Select one of the following model paragraphs and delete those not required.

8. Model 10PBR45 marked PUSH TO OPEN, 4.5 inches (11.43 cm) by 1.25 inch (3.19 cm).
9. Model 10PBR45LL Handicapped logo, 4.5 inches (11.43 cm) by 1.25 inch (3.19 cm).
10. Model 10PBR451 Handicapped logo and marked PUSH TO OPEN, 4.5 inches (11.43 cm) by 1.25 inch (3.19 cm)
11. Model 10PBR4510 no marking, 4.5 inches (11.43 cm) by 1.25 inch (3.19 cm).
12. Model 10PBR4510PTS Push to Slow with Handicapped logo, 4.5 inches (11.43 cm) by 1.25 inch (3.19 cm).

Note to Specifier: Select one of the following mounting paragraphs and delete those not required.

13. Model 10BOX45RNDSM – ABS surface mount box
14. Model 10BOX45RNDFM – ABS flush mount
15. Model 10ESCUTCHEON45 – Stainless steel surface mount escutcheon

BEA Inc.
RIDC Park West
100 Enterprise Drive
Pittsburgh, PA 15275-1213

Phone: 1.800.523.2462
Fax: 1.888.523.2462

Product image and Application Photo

Technical Specs:

Faceplate Material	16 gauge, 304 2B Stainless Steel
Backplate Material	1/8 inch (.31 cm) thick, Aluminum
Mounting Screws	Stainless Steel, 6-32 × 1 in & 8-32 × 1 in Allen Head Size: 5/64
Cherry Switch	Single-pole, 15 A, COM/NO/NC Contact

BEA Inc.
RIDC Park West
100 Enterprise Drive
Pittsburgh, PA 15275-1213

Phone: 1.800.523.2462
Fax: 1.888.523.2462

AADM Member American Association of Automatic Door Manufacturers

A HALMA COMPANY

Dimensions:

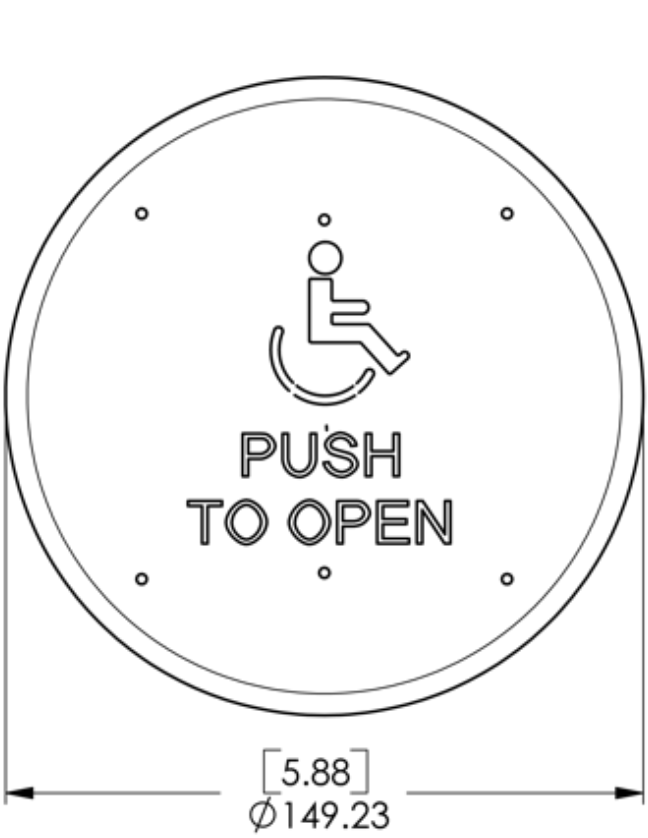

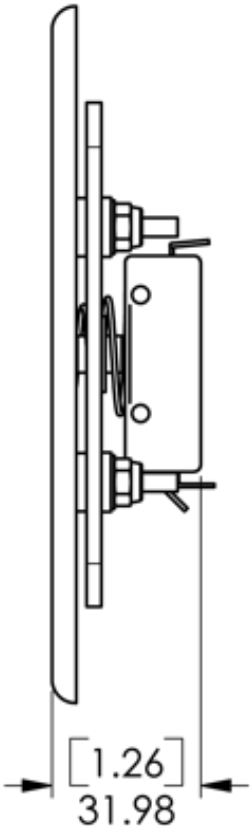

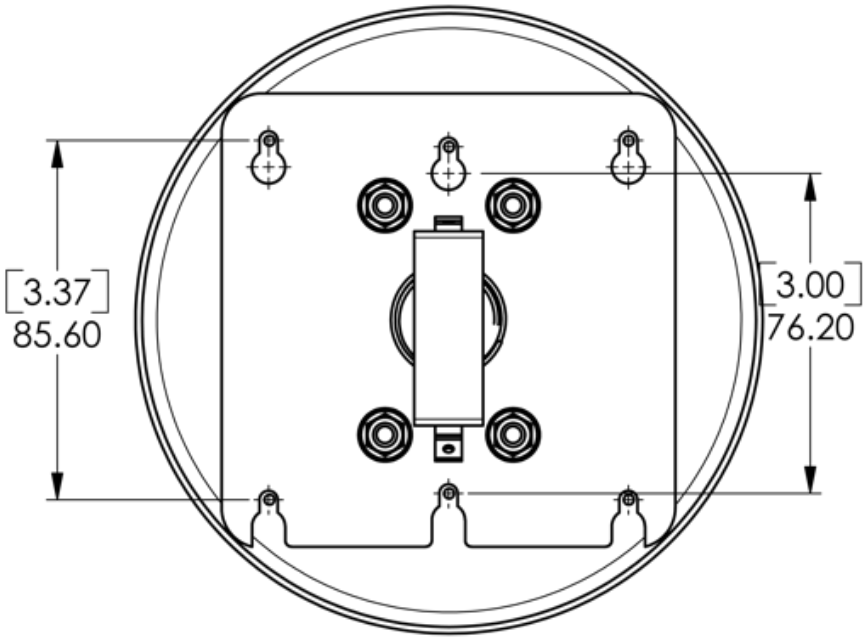

BEA Inc.
RIDC Park West
100 Enterprise Drive
Pittsburgh, PA 15275-1213

Phone: 1.800.523.2462
Fax: 1.888.523.2462

AADM Member American Association of Automatic Door Manufacturers

A HALMA COMPANY