Securitron Magnalock Corp.
550 Vista Boulevard
Sparks, NV 89434

Tel 775.355.5625
Fax 775.355.5633
info@securitron.com
www.securitron.com

ASSA ABLOY, the global leader in door opening solutions

INTEGRATED EXIT DELAY SYSTEM MODEL iMXDa AND iEXDa INSTALLATION AND OPERATING INSTRUCTIONS

1. INTRODUCTION

The Securitron iMXDa represents the state of the art in electromagnetic locking with integrated exit delay. This system incorporates Securitron's BondSTAT and DPS (Door Position Sensor) Magnalock technology along with intelligent microprocessor based, alarm options and a trainable door movement feature. The unit is auto sensing dual voltage (12/24 VDC) and provides a variety of easily selectable operating functions. Mounting has also been simplified by the introduction of an interlocking mounting bracket. The iEXDa is a similar product featuring external initiate using a UL listed egress device. This manual is intended to provide the installation/mounting configurations, electrical requirements, functional options and selectable settings required to successfully install an iMXDa or iEXDa integrated exit delay door system.

2. SPECIFICATIONS

MODEL	iMXDa / iEXDa
Holding Force	1200 Lbs [544 kg]
Dimensions: Length	12.5" [318mm]
Height	3.63" [92mm]
Depth	2" [51mm]
Dual Voltage	12/24 Volts DC
Current: @ 12 VDC	370mA
@ 24 VDC	270mA
Capacitance: @ 12 VDC	32 mF
@ 24 VDC	32 mF
Door Movement (Gap) Sensing Range	1/8" [3.2mm] to 1" [25.4mm]
External Alarm Rating	Voltage: 30 VDC (Maximum) Current: 1 Amp (Maximum)
DPS (DS) Rating	Voltage: 30 VDC (Maximum) Current: 125 mA (Maximum)
Tamper (TS) Rating	Voltage: 30 VDC (Maximum) Current: 2 Amps (Maximum)

3. PRODUCT OVERVIEW

Along with the installation and operating instruction manual, the quick start guide, and the mounting templates, the product package should include:

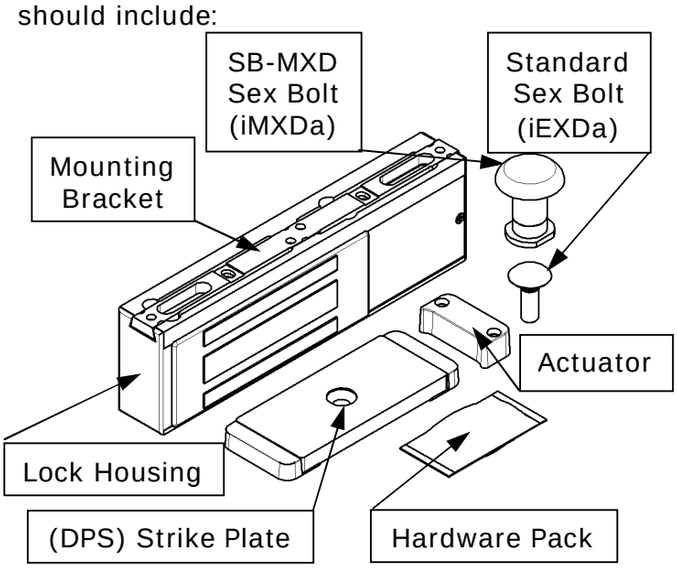

Figure 1

4. RECOMMENDED TOOLS

- Hammer
- Center Punch
- Power Drill
- Drill bits: 9/64", 3/16", 7/32", 3/8", and 1/2" (iEXDa) or 1" (iMXDa) Diameters
- Wrenches: 7/16" open end (or adjustable), 1/2" box/open end (or adjustable), 1-1/4" open end (or 12" adjustable), 3/16" Hex Key (Allen) and 3/32" Hex Key (Allen) – provided
- Pliers, vise grip
- Screwdrivers: #1, #2 and #3 Phillips
  1/8" Flat Blade
- Masking Tape
- Fish Tape or Lead Wire
- Wire Strippers/Cutter
- Multimeter

P/N 500-22175
Rev. A, 01/10

5. INSTALLATION INSTRUCTIONS

5.1 Pre-Installation Survey

It is recommended that a site survey be performed to determine the mounting location based on the following:

- Physical strength of mounting areas should meet or exceed the holding force of the iMXDa/iEXDa.
- Routing of the lock wiring for protection from damage due to intrusion or vandalism.
- Door clearance should be considered to prevent a safety hazard.

Because of the lock system's internal sensing, alignment between the lock face and strike are vital for proper operation.

Additional brackets may be needed for proper installation. (See Section 7)

5.2 Mounting Configuration

Figure 2 illustrates a common installation on out-swing doors. The lock housing mounts to the header near the corner opposite the door hinge side. The unit may be mounted horizontally or vertically.

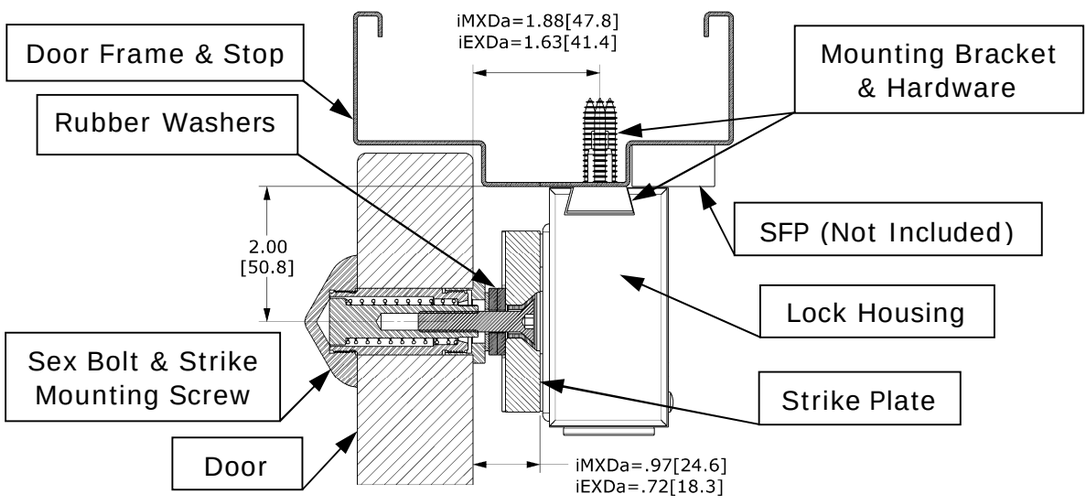

Figure 2
Typical Section of Installation (iMXDa shown)

5.2.1 Physical Installation

The strike plate should be mounted prior to the lock housing. Figure 3 illustrates typical strike mounting for the iMXDa. (For the iEXDa the SB-MXD Sex Bolt, cap, and steel washer shown here are replaced with a standard sex bolt).

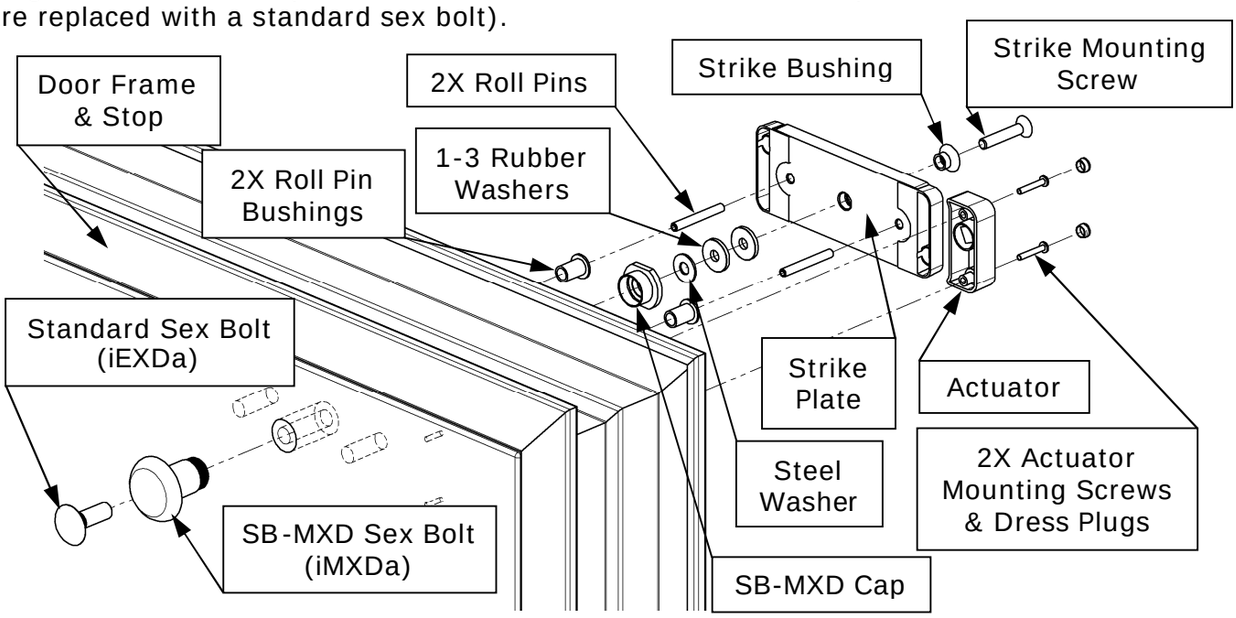

Figure 3

The following general guidelines should also be considered during the installation review:

- Read and follow the instructions on Product Template and the Quick Start Guide which include drilling and mounting directions.
- When installing the strike plate, ensure that the long edge of the strike is at least 1/8" [3.2mm] away from the door frame stop. The installed strike must allow the door to close properly.
- Provide at least 3/4" [19mm] clearance between the end of the lock and the corner of the door frame for tool access.
- The entire mounting area for the lock bracket and housing must be a flat surface.
- When installing the lock in the vertical position it is recommended to use only one (1) roll pin and bushing to guide the strike plate. The upper roll pin location of the mounted strike should be used when mounting the strike vertically.
- Check the external and internal areas of the marked door and frame for any mounting obstacles and make necessary adjustments to avoid these obstacles. Use the template provided for marking the mounting locations of the lock housing mounting bracket and strike.
- The installed lock (E-laminate) face and the strike plate must be aligned so that they are centered with each other.

5.2.1.1 Mounting of the Strike and Actuator:

Use the product template and the step-by-step instructions inside the iMXDa/iEXDa Quick Start Guide to install the strike plate and actuator to the door.

DO NOT OVERTIGHTEN THE STRIKE/SEX BOLT ASSEMBLY – THIS CAN CAUSE DAMAGE TO THE RUBBER WASHERS AND MAY PREVENT THE PROPER OPERATION OR REDUCE THE HOLDING STRENGTH OF THE UNIT

5.2.1.2 Mounting of the Lock Housing:

Use the product template and the step-by-step instructions inside the iMXDa/iEXDa Quick Start Guide to install the mounting bracket and lock housing to the door frame.

STRIKE/LOCK ALIGNMENT IS IMPORTANT FOR LOCK SYSTEM STATUS SENSING FUNCTIONS AND FOR THE OPTIMUM MAGNALOCK HOLDING FORCE

Figures 4 and 5 below illustrate a typical lock housing installation on a steel door frame.

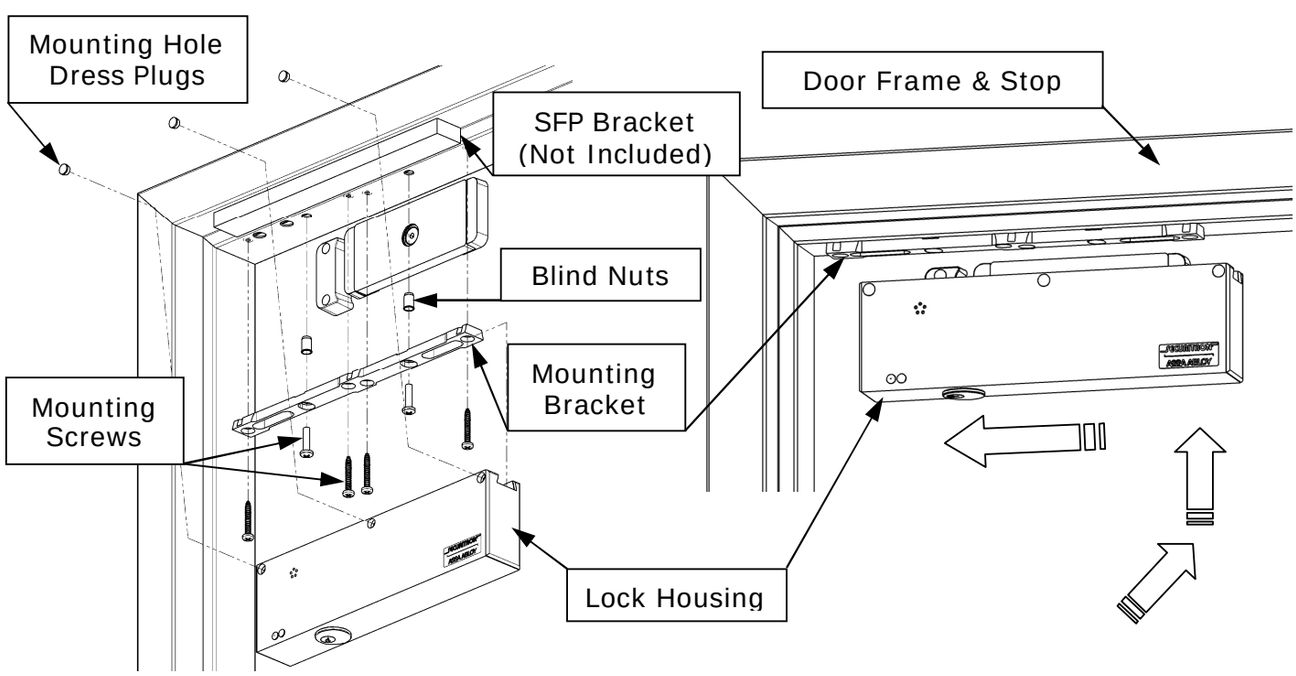

Figure 4 Figure 5

At least two (2) blind nuts (as specified by the Quick Start Guide and template) MUST be used for installing the mounting bracket to aluminum and/or hollow metal frames.

BE SURE TO USE THE THREAD LOCKING COUMPOUND ON THE TWO SCREWS THAT ATTACH TO THE BLIND NUTS

NEVER USE SHEET METAL SCREWS ALONE TO MOUNT THE LOCK HOUSING TO A METAL DOOR FRAME

5.2.2 Blind Nut Installation

Install a blind nut into each of the 3/8" [9.5mm] holes specified by the template using the blind nut collapsing tool provided. Use Figure 6 for the installation of the blind nuts:

1. Insert the assembled blind nut installation tool provided into a mounting hole.
2. Use a 1/2" [13mm] box or open end wrench for holding the install nut.
3. Use a 3/16" [5.0mm] hex wrench to turn the socket cap screw and collapse the blind nut.
4. Remove the collapsing tool when finished.
5. Verify that the blind nut is securely collapsed.
   (The collapsing tool is reusable for several blind nut installations).

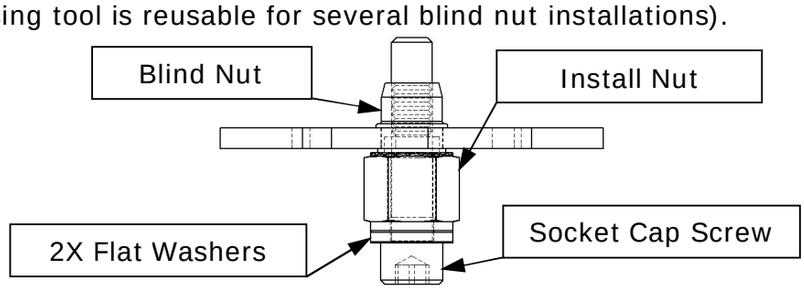

Figure 6

5.3 Electrical Installation

5.3.1 General Characteristics

The iMXDa/iEXDa is a low current device that uses specialized internal circuitry to suppress inductive kick-back. Refer to the Section 2 specifications for the recommended operating voltage range.

5.3.2 Electrical Standards

DC voltage, full-wave rectified, must be provided for proper operation of the iMXDa/iEXDa. The positive (+) terminal receives +12VDC or +24VDC, and the negative (-) terminal, 0 Volts. If the unit is connected with reverse polarity, it will not operate. The iMXDa and iEXDa are auto sensing dual voltage lock systems.

5.3.3 Sensor Ranges (ELECTRICAL)

The Magnalock's internal bond monitoring system is not only sensitive to the proper physical position of the strike, but also voltage. Voltage in the range specified in Section 2 must be applied.

5.3.4 Electrical Wiring

All wiring to the installed unit is made to the main terminal strip on the PC board inside the wire access compartment. See Appendix B for wire gage size calculations. Further user-specific (control) wiring connections are described in Section 6.7.

5.3.5 Power Supply Connections

Figures 7, 8 and 9 illustrate the proper electrical wiring required for connecting the iMXDa/iEXDa to various Securitron power supplies, for 1 Amp see Figure 7 for the larger 2 to 15 Amp Securitron power supplies utilizing the CCS-4 or CCS-8 see Figures 8 and 9.

ALWAYS REFER TO THE MANUFACTURER'S PRODUCT MANUAL FOR PROPER CONNECTION AND IMPLEMENTATION OF THE POWER SUPPLY BEING USED
BATTERY BACK-UP IS NOT ALLOWED BY BUILDING CODES FOR INSTALLATIONS WHICH REQUIRE THE LOCK TO RELEASE THE DOOR UPON LOSS OF POWER (SEE APPENDIX D)

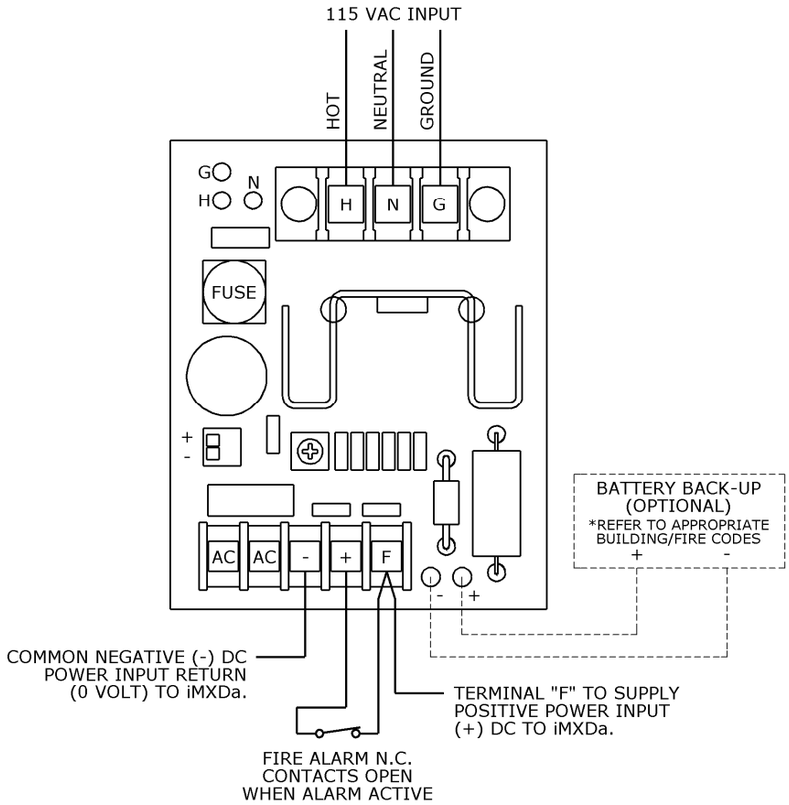

Figure 7
Connections for 1 Amp Power Supply (BPS-12-1/BPS-24-1)

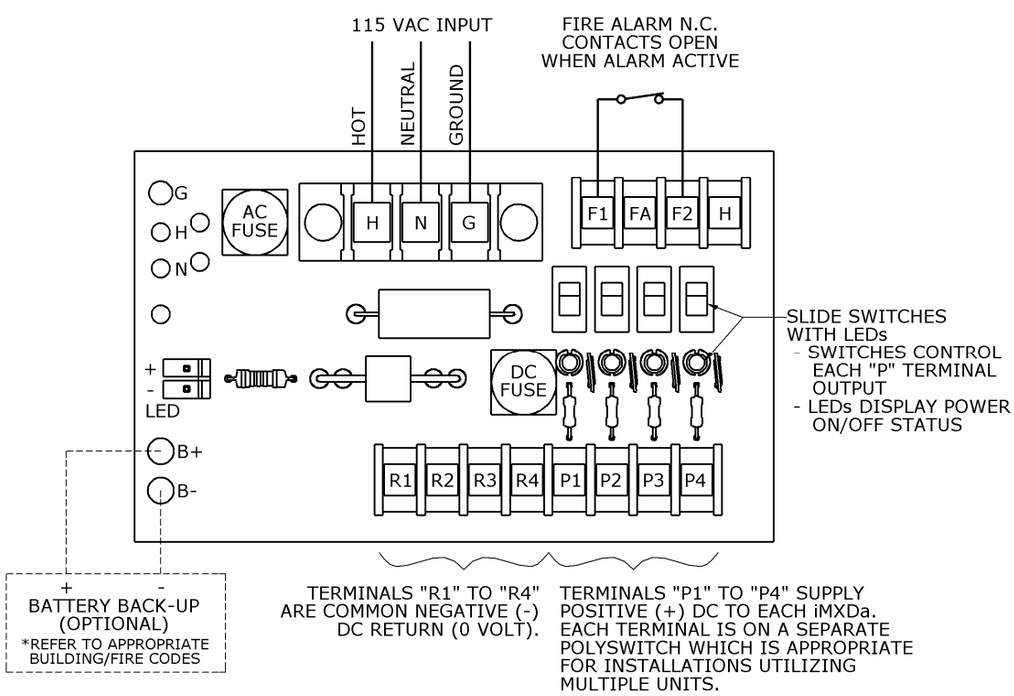

Figure 8
Connections for a 2 to 4.5 Amp (BPS) Power Supply

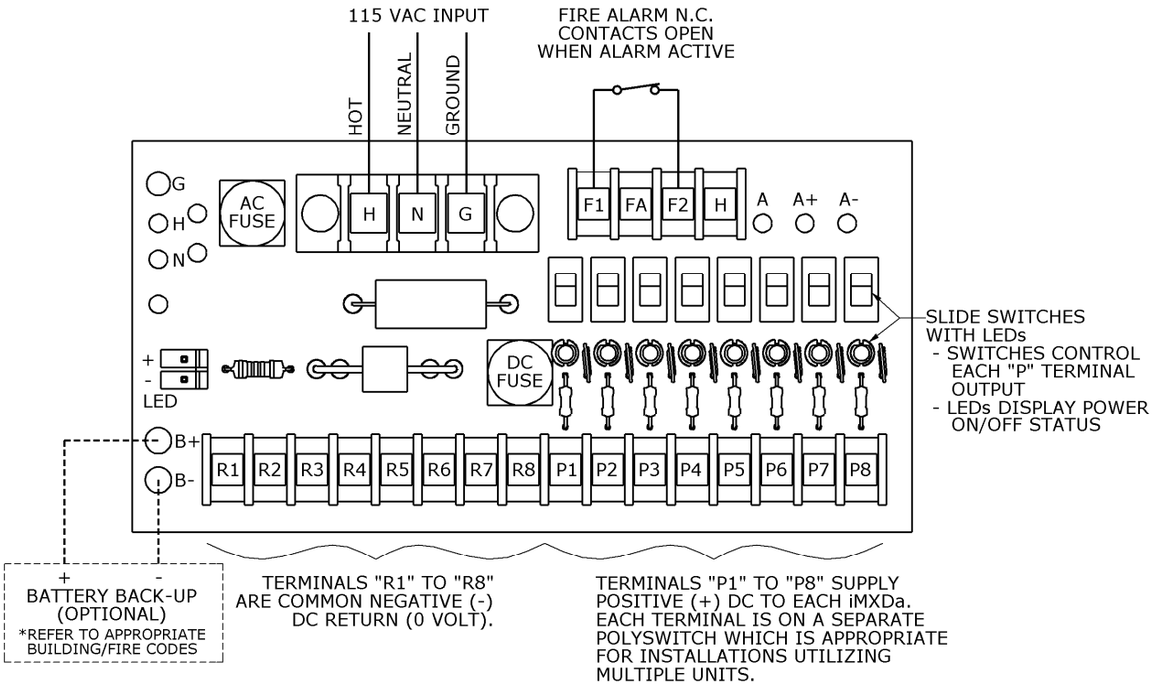

Figure 9
Connections for a 6 to 15 Amp (BPS) Power Supply

THE END USER AND INSTALLER ARE RESPONSIBLE FOR COMPLIANCE WITH ALL LOCAL FIRE & BUILDING CODES AND REGULATIONS

5.3.6 Emergency Release

Integrated exit delay Magnalock units are typically wired into the building fire protective or sprinkler system. It is recommended to use the fire alarm system auxiliary relay to perform break of power. Securitron power supplies have terminals for interconnection to such emergency release switches.

6. SYSTEM OPERATIONS

6.1 General Description of Operation

The iMXDa secures an opening using a model 62 Magnalock within the unit housing. At an attempt to exit, the SB-MXD sex bolt permits the door to move within a 1” limit while remaining secure. Door movement distance (or gap) for an alarm is set by “training” the unit’s microprocessor to trigger at a desired distance. Whenever this programmed door movement is detected, the unit will initiate an alarm. During this alarm sequence, there is a release delay where the local alarm inside the housing sounds and a remote alarm contact activates. At the end of the alarm sequence, the lock releases, the local alarm stops but the external alarm contact remains active. The unit remains in the released state until it is either manually or automatically relocked (reset). Reset must be accomplished manually by the momentary turn of the Integrated Reset/Bypass (IRB) key switch or can be performed through a remote input. Further explanation of the alarm and relocking functions is covered in this section.

THE iMXDa PROGRAMMABLE DOOR GAP SENSING RANGE MAY BE SET BETWEEN 1/8” [3.2mm] AND 1” [25.4mm]

THE STANDARD iMXDa IS FACTORY SET TO A 1/2” DEFAULT GAP DISTANCE
SPECIAL UNITS ARE AVAILABLE WITH SMALLER GAP MOVEMENT REQUIREMENTS

6.1.1 Power On Reset

Power on reset is a start up function that is initiated whenever power is applied to the iMXDa unit. At power up the iMXDa locking system performs the following self diagnostics:

- Validates program version.
- Reads DIP switch settings.
- Verifies door position.
- Confirms lock status secure.
- Initiates standard operational mode.

6.1.2 Component Layout

Figure 10 shows the general layout and position of the PC board in the wire access compartment.

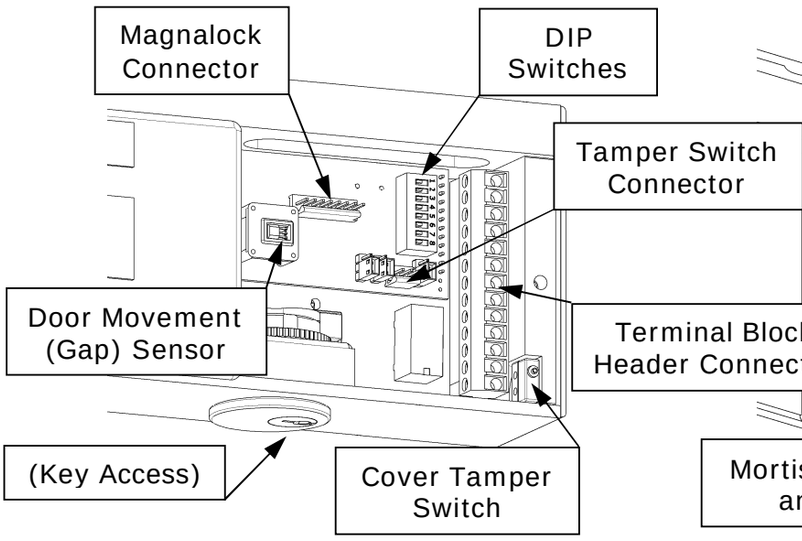

Figure 10

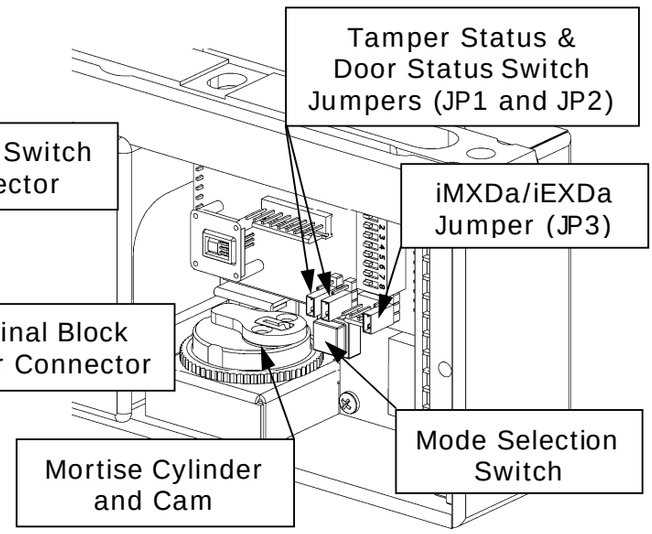

Figure 11

6.1.3 Integrated Reset/Bypass (IRB) Key Switch

The iMXDa/iEXDa incorporates a mortise lock cylinder and cam accessible from the bottom of the lock housing shown in Figure 11. This Integrated Reset/Bypass (IRB) key switch is required for gap adjustment, and activation of the reset and bypass functions. The furnished cylinder is replaceable with a variety of commercial cylinder/cam combinations. See Appendix C for details.

6.2 Standard Operational Mode

This is the mode that the iMXDa unit operates in most of the time. When the door is closed, and the magnet is secure the green LED will be illuminated.

Visual status is provided by green and red LEDs. The following is a description of the LED indication when the unit is functioning.

- The green LED is illuminated when the door is closed and secure.
- Both green and red are illuminated when the system is in an alarm sequence.
- The red is illuminated when an alarm event has released the door and it is awaiting reset.
- Neither LED will be illuminated if the lock is not powered or is in bypass mode.

6.3 Bypass Mode – IRB (Or External)

Bypass mode allows a timed momentary release of the door. Bypass mode can be entered via the onboard (IRB) key switch or an external switch. (See Section 6.5.3 for a description and Section 6.7.1 for connection details). Using the onboard key switch provides a fixed 15 second door release with automatic re-locking. During an alarm event bypass can be used for emergency exit.

6.4 Reset – IRB (Or External)

Reset relocks the door after an alarm event. To reset manually simply turn the onboard key switch clockwise. Reset can also be accomplished using an external switch. See Section 6.7.1 for connection details.

6.5 System Functions

The following is a general description of the iMXDa lock system functions and DIP switch settings. For DIP switch location see Figure 10. DIP switch setting changes are recognized at the microprocessor when:

- Power is applied to the lock.
- During a bypass event (prior to the door being closed).
- After an alarm event (prior to reset).

For a complete illustration of DIP switch settings and their function see Figure 12 and Table A. For an overview matrix of agency regulated (building code) functions see Appendix D.

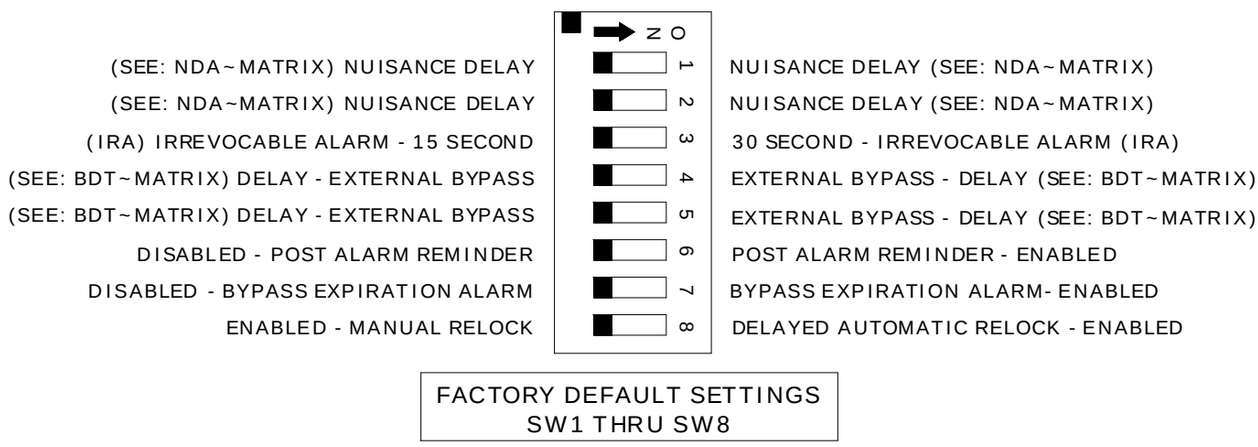

Figure 12

Operation	8 Position DIP		Directive	Factory Default Setting
~ NDA ~ Nuisance Delay Alarm Matrix	SW1	SW2	Seconds	
	OFF	OFF	zero	√
	ON	OFF	1	
	OFF	ON	2	
	ON	ON	3	
~ IRA ~ Irrevocable Alarm	SW3		Cycle Time	
	OFF		15	√
	ON		30	
~ BDT ~ Bypass Delay Time (External Only) Matrix	SW4	SW5	Seconds	
	OFF	OFF	zero	√
	ON	OFF	5	
	OFF	ON	10	
	ON	ON	15	
~ PAR ~ Post Alarm Reminder	SW6		Function	
	OFF		Disabled	√
	ON		Enabled	
~ BEA ~ Bypass Expiration Alarm	SW7		Function	
	OFF		Disabled	√
	ON		Enabled	
~ MDR ~ Manual/Delayed Relock	SW8		Function	
	OFF		Manual	√
	ON		Delayed	

Table A
DIP Switch Settings Matrix

6.5.1 NDA (Nuisance Delay Alarm) – DIP SW1 and SW2

NDA is a zero, 1, 2 or 3 second nuisance or warning delay (revocable) which initiates when door movement is detected. When triggered the local alarm will sound (pulsing tone). The factory default setting is zero seconds and is changed via DIP switch settings of SW1 and SW2.

6.5.2 IRA (Irrevocable Alarm) – DIP SW3

IRA is an irrevocable alarm which initiates when door movement is detected. Once initiated the complete delay cycle must expire prior to reset. This is a set 15 or 30 second total alarm time cycle including any NDA time. The audible alarm sounds until the IRA expires. The factory default setting is 15 seconds but can be changed to 30 seconds by changing DIP switch SW3.

6.5.3 BDT (Bypass Delay Time) – DIP SW4 and SW5

BDT is an external switch bypass function only. Once triggered, a set zero, 5, 10 or 15 second release time is initiated. The factory default setting is zero but it can be set to 5, 10 or 15 second (trailing edge trigger) by changing DIP switches SW4 and SW5.

6.5.4 PAR (Post Alarm Reminder) – DIP SW6

PAR is an audible alarm indicating the lock has completed an alarm cycle. After 5 seconds the internal alarm will beep rapidly 3 times followed by 5 seconds of silence and will repeat until reset. The factory default setting is off but PAR can be turned on with DIP switch SW6.

6.5.5 BEA (Bypass Expiration Alarm) – DIP SW7

The bypass expiration alarm is an audible rapid 4-beep signal that repeats three (3) times over a 5 second time period. This indicates that the bypass time period has expired and the door must be closed, if not the lock will go into alarm mode. The factory default setting is off but this function can be turned on via DIP switch SW7.

6.5.6 MDR (Manual/Delayed Relock) – DIP SW8

The manual/delayed relock allows either manual relock or delayed (30 second) automatic relock. The factory default setting is manual relock but this can be changed with DIP switch SW8.

THE END USER AND INSTALLER ARE RESPONSIBLE FOR COMPLIANCE WITH ALL LOCAL FIRE & BUILDING CODES AND REGULATIONS (SEE APPENDIX D)

6.6 Alarms

6.6.1 Internal (Local) Alarm

The internal alarm of the iMXDa/iEXDa lock system consists of an 85-100dB electronic (Piezo) sounder. This audible alarm functions during alarm cycles, post alarm reminders and bypass egress time expiration.

6.6.2 External (Remote) Alarm

The external alarm for the iMXDa/iEXDa consists of an integrated SPDT dry contact with connection points marked “C”, “NO” and “NC” (see Figure 13). At the initiation of an alarm sequence or at loss of power the relay changes state to provide a signal to an alarm or monitoring system.

6.7 Control Wiring

Figures 13, 14 and 15 show general wiring, terminal block layout and the optional hard wired features for the iMXDa/iEXDa.

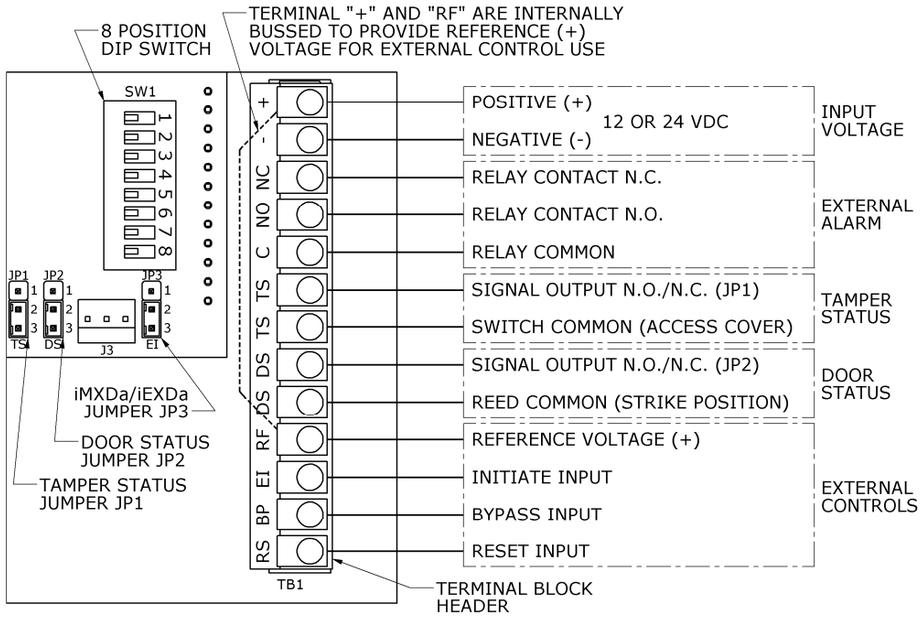

Figure 13
General Control Board Diagram

6.7.1 External Controls

The unit is also has terminals which provide the connections necessary for remote control of specific functions. Figure 14 shows examples of these connections.

- The “RS” terminal provides a connection for remote reset.
- The “BP” terminal provides a connection for remote bypass.
- The “EI” terminal provides a connection for external initiate of exit delay. To operate the external initiate (iEXDa) the JP3 jumper which by factory default is placed over pins 2 and 3 must be removed and placed over pins 1 and 2 (see Figure 15).
- The “RF” terminal is a common reference (+) voltage supply point that may be used for the above described external controls.

6.7.1.1 External Initiate (iEXDa)

External initiate is used is normally used when it is desired to provide access via an exit device rather than door movement. The remote make-to-break device is wired to provide a signal which triggers the lock to release. All lock function dip switch settings remain intact. The actuator must be installed for activation of the door movement (gap) sensor. The sensor is used to monitor door position for post alarm, bypass reminder and relock functions.

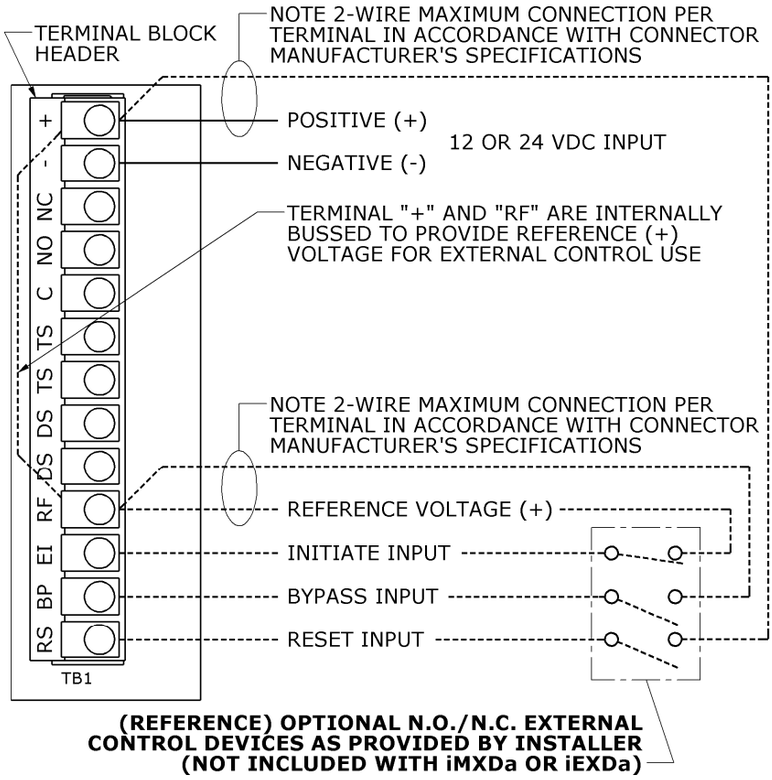

Figure 14
Optional External Control Connections

6.7.2 Tamper Status (JP1) and Door Status (JP2) wiring

The tamper status and door status switches provide dry contact output at the terminal block header. Output is field selectable via the jumpers shown in Figure 15. The factory default jumper settings for both JP1 and JP2 are set for normally closed operation (pins 2 and 3). If normally open operation is desired, change the jumper setting to pins 1 and 2.

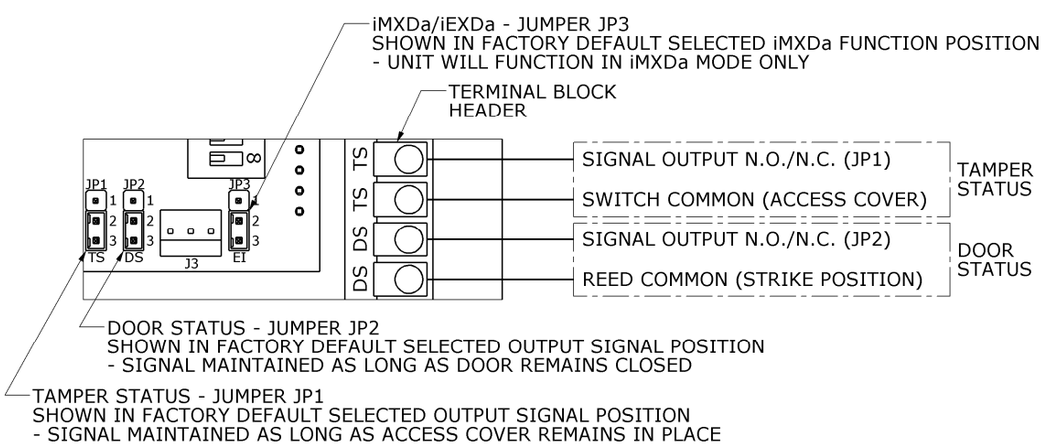

Figure 15
Selectable Output Jumper Positions

6.8 Gap Adjustment Mode – IRB (Only)

As previously mentioned, the iMXDa may be "trained" to trigger at any desired gap distance between 1/8" and 1". To access the gap adjustment mode, ensure that the door is at rest in the closed position. Insert the key into the IRB cylinder and rotate clockwise to actuate the mode selection switch. The switch must be actuated three (3) consecutive times within a five (5) second period.

- The first switch actuation will cause both LEDs to go off.
- The second switch actuation will cause the red LED to blink on and off once.
- After the third switch actuation, the green and red LEDs will alternate on and off for one (1) second, and then the red LED will remain on.

At this point the iMXDa unit has read and stored the closed position of the door. Open the door to the desired (gap) distance, and then turn the key clockwise once. The red LED will go out and the green LED will go on. The door movement (gap) distance is now set. Close the door and the unit is adjusted and ready for operation.

TO RETURN THE UNIT TO THE STANDARD OPERATING MODE WITH NO DESIRE TO CHANGE DURING GAP ADJUSTMENT MODE, WAIT 10 SECONDS AND THE UNIT WILL AUTOMATICALLY RETURN TO STANDARD OPERATIONAL MODE

6.9 EXD-1L LABEL INSTALLATION PROCEDURE

Each iMXDa and iEXDa comes with an EXD-1L exit delay door label as required by fire code. Please follow the included application instructions to apply the lettering to a door.

7. SPECIALIZED MOUNTING BRACKETS

- SFP – Stop Filler Plate – The SFP bracket is designed to fill the stop rabbit and extend the flat mounting surface of the frame head. Available thicknesses are; 1/4" [6.4mm], 3/8" [9.5mm], 1/2" [12.7mm] and 5/8" [15.9mm]. Length available for the iMXDa is 12" [305mm]. (Figures 2, 4 and 5 show typical installation configurations).

8. MAGNALOCK MAINTENANCE

8.1 Visual Inspection

- Check the rubber washers for elasticity and proper pivoting. Tighten as required.
- Check for build-up of debris on the magnet face and strike armature. Clean as required.
- Check for rust on the magnet and strike plate armature. Clean as required.
- Check for iron debris on the actuator and strike (DPS) magnetic housings. Remove debris as required.

8.2 Cleaning Methods

- Apply rubbing alcohol onto a clean cloth and thoroughly wipe down the Magnalock and strike plate armature.
- Cleaning once a year is recommended.
- Clean every six months where minor rusting occurs.
- Clean every three months if rust conditions are severe.
- Use a plastic dishwashing scrub pad to aid in the removal of rust.

DO NOT USE PETROLEUM BASED PRODUCTS FOR CLEANING
DO NOT USE STEEL WOOL BASED SCRUB PAD OR SANDPAPER

APPENDIX A

Troubleshooting

Problem	No Alarm when Testing Door Movement	Points of Reference
Solution	Check for specified voltage to unit	Section 2
	Check for specified current draw at unit	Section 2
	Check magnetic actuator for proper mounting	iMXDa Template
	Verify gap testing and training of unit	Section 6.8 and 6.9

Problem	Immediate Alarm when Testing Movement	Points of Reference
Solution	Check door for proper closure at opening	Section 6
	Check magnetic actuator for proper mounting	iMXDa Template
	Check magnetic and strike for proper mounting	iMXDa Template
	Verify gap testing and training of unit	Section 6.8 and 6.9

Problem	Lock Does Not Generate a Magnetic Field	Points of Reference
Solution	Check the Magnalock is connected to PCB	Section 6.1
	Check for specified voltage at Magnalock	Section 2
	Check for specified current draw at Magnalock	Section 2

Problem	Reduced Holding Force	Points of Reference
Solution	Check for specified voltage at Magnalock	Section 2
	Check for specified current draw at Magnalock	Section 2
	Check strike for proper mounting	Section 5.2.1
	Check the Magnalock and strike for obstructions	Section 2
	Check Magnalock and strike are properly cleaned	Section 8

Problem	DPS Does Not Report Door Status	Points of Reference
Solution	Check strike mounting for proper alignment	Table A / Section 5.2.4
	Check for proper door closure	Section 8.1
	Check for proper voltage/current on switch	Section 2
	Check resettable protection device	Section 1

Problem	The Magnalock is Dirty or Rusty	Points of Reference
Solution	Improper cleaning – Maintenance Equipment	Section 8

Problem	Electronic Noise Interference with Access Control System	Points of Reference
Solution	Check for voltage from Magnalock to door frame. There should be no voltage present.	Section 2

IF PROBLEMS PERSIST CALL SECURITRON TOLL FREE
(800) MAG-LOCK
(800) 624-5625

APPENDIX B

Wire Gauge Factoring

B.1 Remote Power Supply

- The iMXDa/iEXDa requires adequate voltage and current for proper operation.
- Resistance is created by the length and gauge (size) of the wire being used.
- An accurate estimated distance from the power supply to the opening is crucial.
- For optimum operation the correct size gauge wire must be used.
- The devices used operate the best with the least amount of resistance on the source.
- Using the correct gauge wires protects against large voltage and current (load) losses.
- The gauge is determined by the wire distance, voltage and current of all devices.

B.2 Determining Wire Gauge

- Follow Example A (12VDC system) and Example B (24VDC system) below.
- Use Table B-1 and Table B-2 to determine the correct wire gauge for the application.

B.2.1 Example A: (an iMXDa used in a 12VDC system)

Devices Used	Amps (12VDC)	Progressive Totals
iMXDa	0.370	0.370
DK-26 Access	0.160	0.530
MK Bypass/Reset	0.020	0.550
Total Current Rounded Up (Table 1)		0.600A

Using Table B-1 (12VDC) Find: - Current Draw .600 Amps
- Wire Distance 200 Feet (One-Way)

Solution: 18 Gauge is indicated for proper installation

B.2.2 Example B: (an iEXDa used in a 24VDC system)

Devices Used	24VDC Amps	Progressive Totals
iEXDa	0.270	0.270
TSB Touch Bar	0.025	0.295
DK-11 Access	0.070	0.365
Total Current Rounded Up (Table 2)		0.400A

Using Table B-2 (24VDC) Find: - Current Draw .400 Amps
- Wire Distance 200 Feet (One-Way)

Solution: 22 Gauge is indicated for proper installation

TO SOLVE: INTERSECT ROW (Current) and INTERSECTING COLUMN (Wire Distance)

CURRENT	WIRE GAUGE								
1.000A	20	18	16	14	14	12	10	10	8
.800A	22	18	18	16	14	12	10	10	8
.600A	22	20	18	18	16	14	14	12	10
.400A	22	22	20	18	18	16	14	14	12
.300A	24	22	22	20	18	18	16	14	14
.200A	24	22	22	22	20	18	18	16	14
12VDC	50' [15m]	100' [30m]	150' [46m]	200' [61m]	300' [91m]	400' [122m]	500' [152m]	750' [229m]	1000' [305m]
	WIRE DISTANCE								

Table B-1

CURRENT	WIRE GAUGE								
1.000A	22	20	20	18	16	14	14	12	10
.800A	22	22	20	18	18	16	14	14	12
.600A	24	22	22	20	18	18	16	14	14
.400A	24	22	22	22	20	18	18	16	14
.300A	24	24	22	22	22	20	20	18	16
.200A	24	24	24	22	22	22	20	20	18
24VDC	50' [15m]	100' [30m]	150' [46m]	200' [61m]	300' [91m]	400' [122m]	500' [152m]	750' [229m]	1000' [305m]
	WIRE DISTANCE								

Table B-2

- The Wire Distance indicated on the table above represents a 2-wire "One-Way" length from the power supply source to entryway installation area.
- The Gauge values specified on the table above represent a 2-wire "Round Trip" length from the power supply source to entryway installation and returning back to the power supply source.

<u>IMPORTANT</u>

THE 200' [61m] WIRE RUN IN EACH TABLE FACTORS A 400' [122m] ROUND TRIP

APPENDIX C

C.1 Mortise Cylinder/Cam

The mortise cylinder and cam is field replaceable. The cylinder is retained by a knurl-nut and bracket to ensure proper alignment and provide anti-rotational support. The nut is removable, and may be loosened or tightened by using a flat-blade screwdriver.

C.2 Alternate Cylinders

Cylinders must be 1-1/8" [28.6mm] deep style for proper alignment with the mode selection switch. The use of 1" [25.4mm] or 1-1/4" [31.8mm] cylinder is not recommended. Figure C-1 specifies the recommended dimensions. If a longer cylinder is used, a spacer ring must be added for proper alignment.

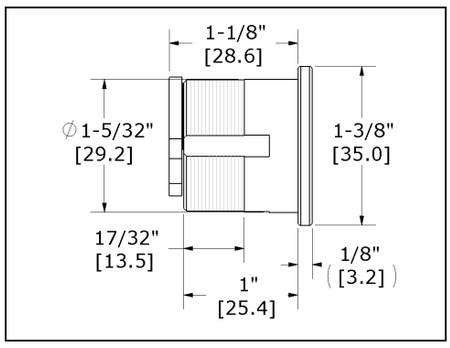

Figure C-1

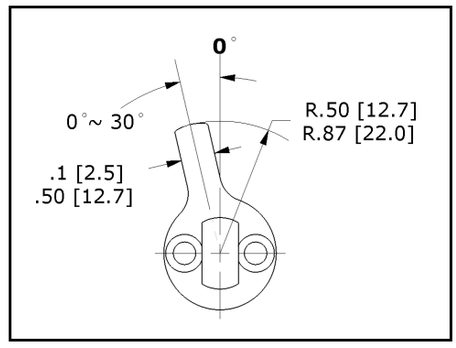

Figure C-2

C.3 Alternate Cams

Various cam types will operate in the iMXDa/iEXDa. Cam dimensional references with minimum/maximum variables are illustrated in Figure C-2. Figure C-3 displays cams tested for use in the IMXDa/IEXDa. The 13-0097 Cam is factory installed. Other cams may be used.

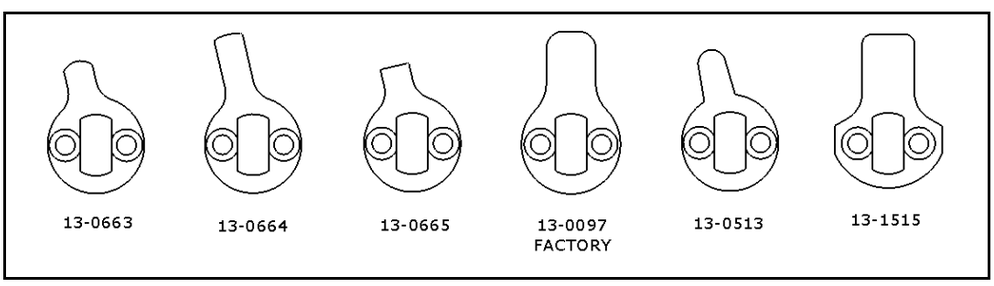

Figure C-3

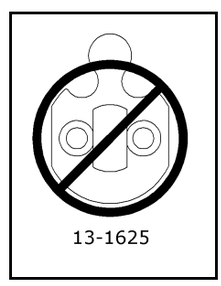

Figure C-4

IMPORTANT

THE CLOVERLEAF STYLE CAM SHOWN IN FIGURE C-4
IS NOT RECOMMENDED FOR THE iMXDa/iEXDa UNIT

IMPROPER CAMS OR CAM MISALIGNMENT WILL NOT OPERATE CORRECTLY AND MAY DAMAGE THE MODE SELECTOR SWITCH

APPENDIX D

D.1 Specific Building Codes

The following general information on code requirements should not be considered definitive. The information provided represents Securitron's best understanding of individual codes at the time of this manual's most recent revision. Codes, however, may change and are also subject to local interpretations that may differ from those provided here. Please consider this information as a preliminary point of reference which should be confirmed or altered in accordance with the direction given by any local authority having jurisdiction.

The following chart (Table D-1) describes four individual building code requirements in five areas of function: Nuisance Delay, Release Delay, Post Alarm Relocking, Power Loss and Special Application Requirements.

FUNCTION	Nuisance Delay	Release Delay	Post Alarm Relocking	Power Loss	Special Application Requirements
NFPA-101 NATIONAL FIRE PREVENTION ASSOCIATION [LIFE SAFETY CODE] (2006)	Permitted: 1-3 Seconds - - - - - - - - Selectable	Permitted: 15 Seconds - - - - - - - Local Approval 30 Seconds	Relocking - - - - - - - - Manual Means ONLY	Door Releases Upon Loss of Power	Visible Sign (1" High x 1/8" Stroke) - - - - - - - - - Reading: "PUSH UNTIL ALARM SOUNDS" "DOOR CAN BE OPENED IN 15 [30] SECONDS"
IBC INTERNATIONAL BUILDING CODE (2006)	Permitted: 1 Second - - - - - - - - Fixed	Permitted: 15 Seconds - - - - - - - Local Approval 30 Seconds	Relocking - - - - - - - - Manual Means ONLY	Door Releases Upon Loss of Power	Visible Sign (Within 12" of Releasing Device) - - - - - - - - - Reading: "PUSH UNTIL ALARM SOUNDS" "DOOR CAN BE OPENED IN 15 [30] SECONDS"
Recognized But Not Active BOCA BUILDING OFFICIALS CODE ADMINISTRATORS (2000) For Reference Only	Permitted: 1 Second - - - - - - - - Fixed	Permitted: 15 Seconds - - - - - - - Local Approval 30 Seconds	Special Relocking Sequence: - - - - - - - Delayed Relock 30 Second Post Door Closure - - - - - - - Custom Times Available	Door Releases Upon Loss of Power	Visible Sign (Within 12" of Releasing Device) - - - - - - - - - Reading: "PUSH UNTIL ALARM SOUNDS" "DOOR CAN BE OPENED IN 15 [30] SECONDS"
NBC NATIONAL BUILDING CODE OF CANADA (2005)	Not Allowed - - - - - - - - Fixed	Permitted: 15 Seconds - - - - - - - ONLY	Relocking - - - - - - - Manual Means ONLY	Door Releases Upon Loss of Power	Visible Sign (Within 12" of Releasing Device) - - - - - - - - - Reading: "PUSH UNTIL ALARM SOUNDS" "DOOR CAN BE OPENED IN 15 SECONDS"

Table D-1

MAGNACARE® LIMITED LIFETIME WARRANTY

SECURITRON MAGNALOCK CORPORATION warrants that it will replace at customer's request, at any time for any reason, products manufactured and branded by SECURITRON since January 1, 1999.

SECURITRON will use its best efforts to ship a replacement product by next day air freight at no cost to the customer within 24 hours of SECURITRON's receipt of the product from customer. If the customer has an account with SECURITRON or a valid credit card, the customer may order an advance replacement product, whereby SECURITRON will charge the customer's account for the price of the product plus next day air freight, and will credit back to the customer the full amount of the charge, including outbound freight, upon SECURITRON's receipt of the original product from the customer.

SECURITRON's sole and exclusive liability, and customer's sole remedy, is limited to the replacement of the SECURITRON product when delivered to SECURITRON's facility (freight and insurance charges prepaid by customer). The replacement, at SECURITRON's sole option, may be the identical item or a newer unit which serves as a functional replacement. In the event that the product type has become obsolete in SECURITRON's product line, this MAGNACARE warranty will not apply. This MAGNACARE warranty also does not apply to custom, built to order, or non-catalog items, items made by others (such as batteries), returns for payment, distributor stock reductions, returns seeking replacement with anything other than the identical product, or products installed outside of the United States or Canada. This MAGNACARE warranty also does not apply to removal or installation costs.

SECURITRON will not be liable to the purchaser, the customer or anyone else for incidental or consequential damages arising from any defect in, or malfunction of, its products. SECURITRON does not assume any responsibility for damage or injury to person or property due to improper care, storage, handling, abuse, misuse, or an act of God.

EXCEPT AS STATED ABOVE, SECURITRON MAKES NO WARRANTIES, EITHER EXPRESS OR IMPLIED, AS TO ANY MATTER WHATSOEVER, INCLUDING WITHOUT LIMITATION THE CONDITION OF ITS PRODUCTS, THEIR MERCHANTABILITY OR FITNESS FOR ANY PARTICULAR PURPOSE.

PATENTS

The Securitron iMXDa is listed under U.S. patent #6,609,738 and 5,758,913.

Additional patents pending.